TC19014L
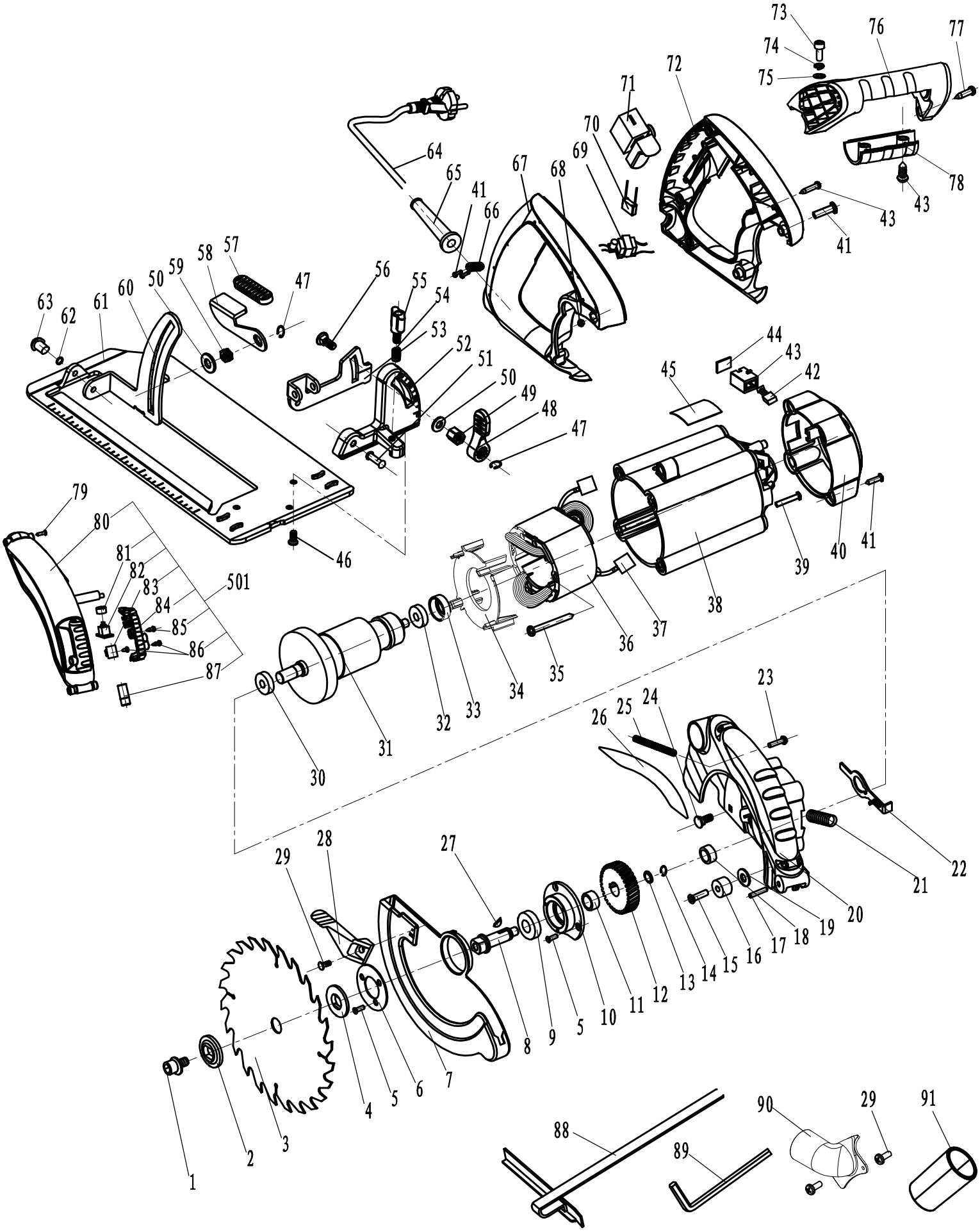
Circular Saw